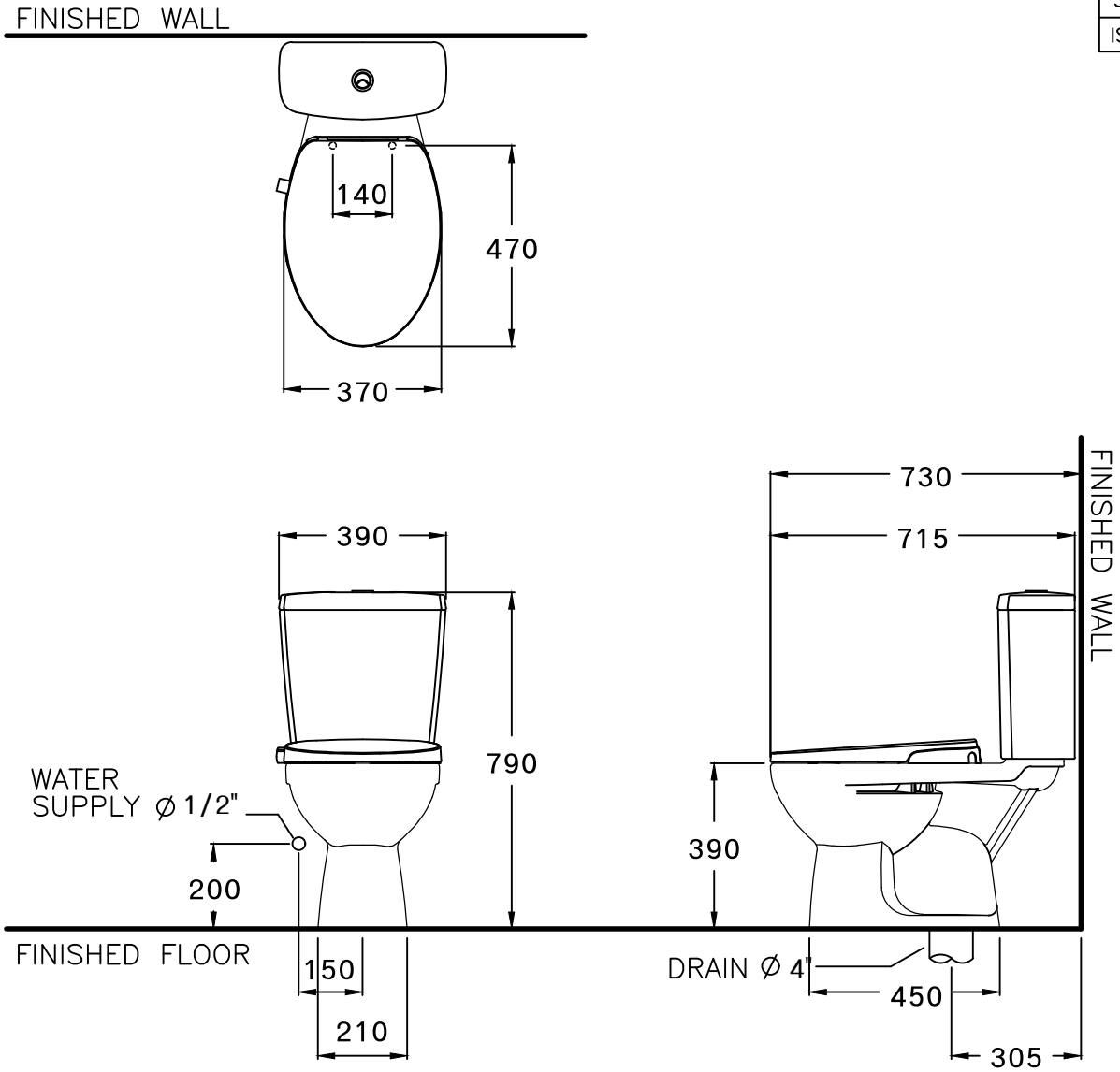CATALOG DRAWING	
CODE	C–13443(CN4)
MODEL	Boom
SEAT	CVN92204
ISSUE	02/11/63